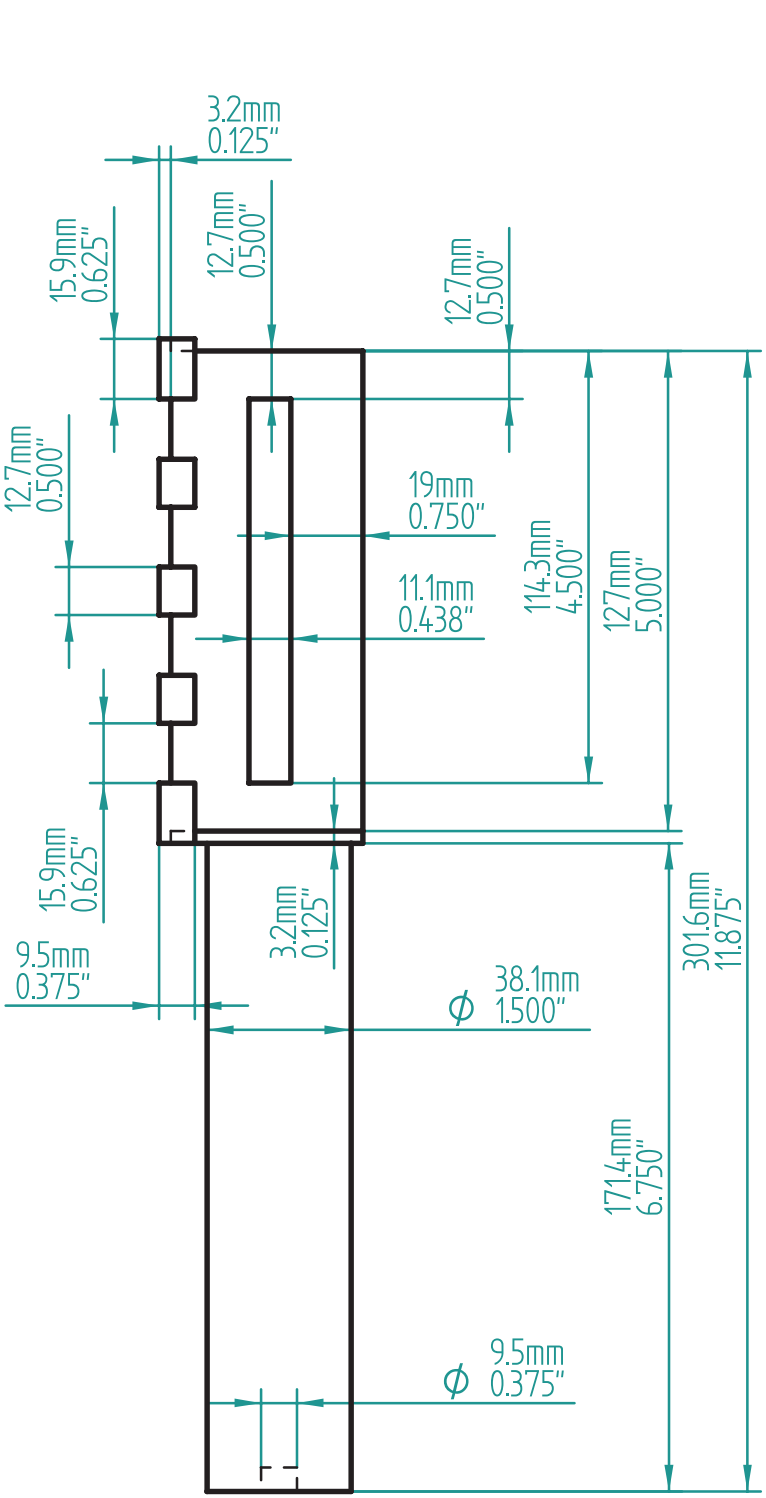

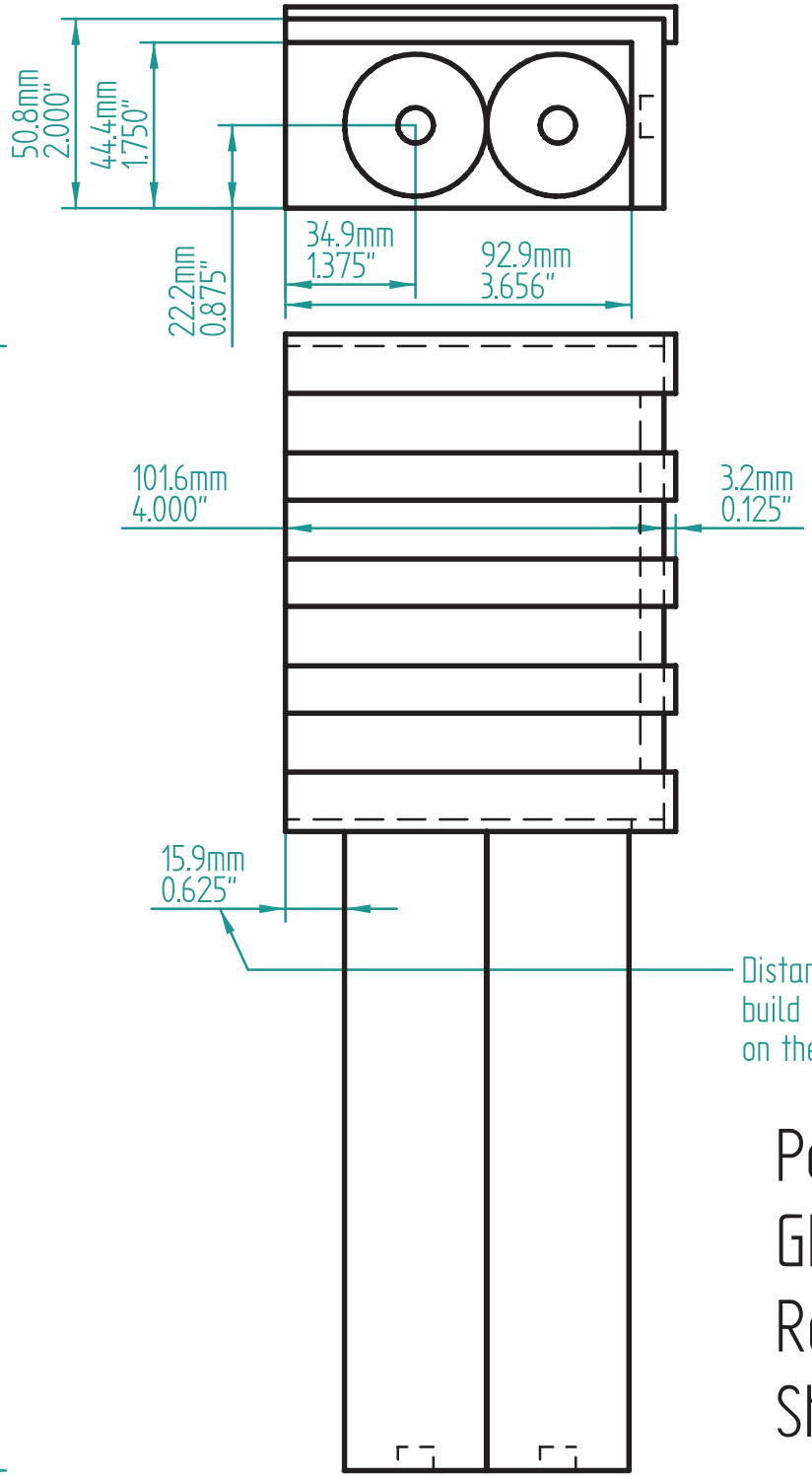

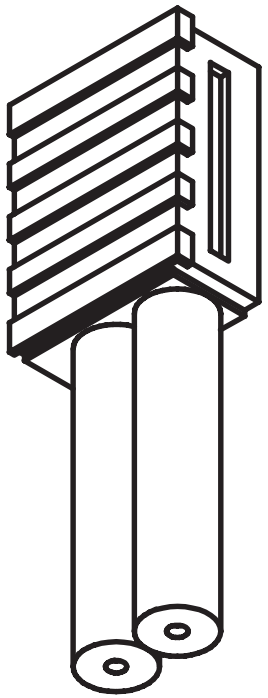

Distance is 3,2mm/0.125" on packs build for GB II, but it wasn't changed on the GBI packs refitted for GB II !

Power Cell & Injectors
GB I Protonpack
Revison 0.97
Sheet 4