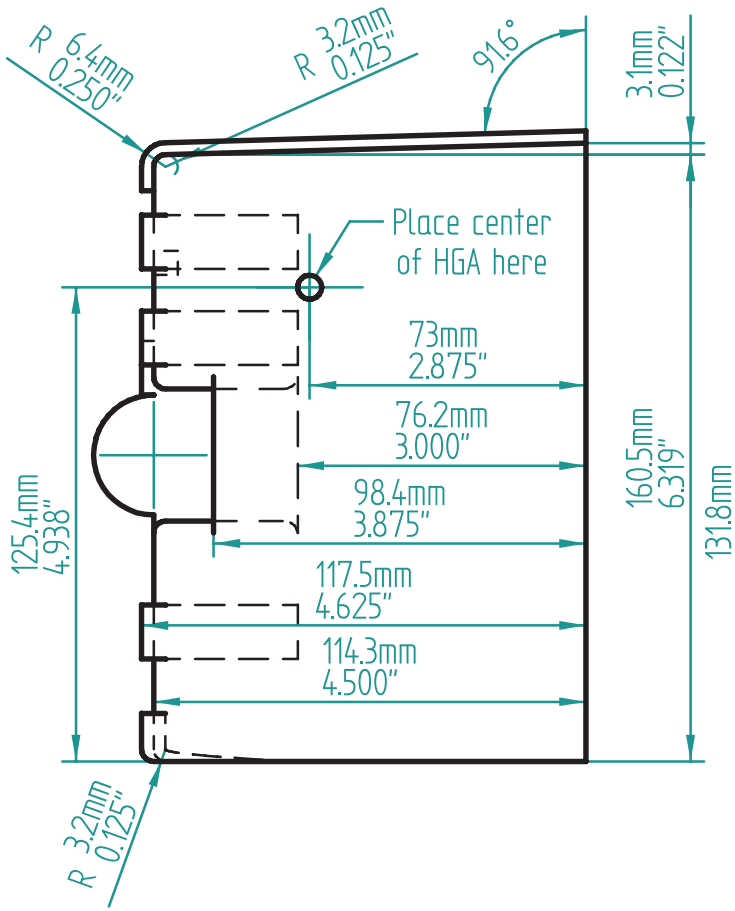

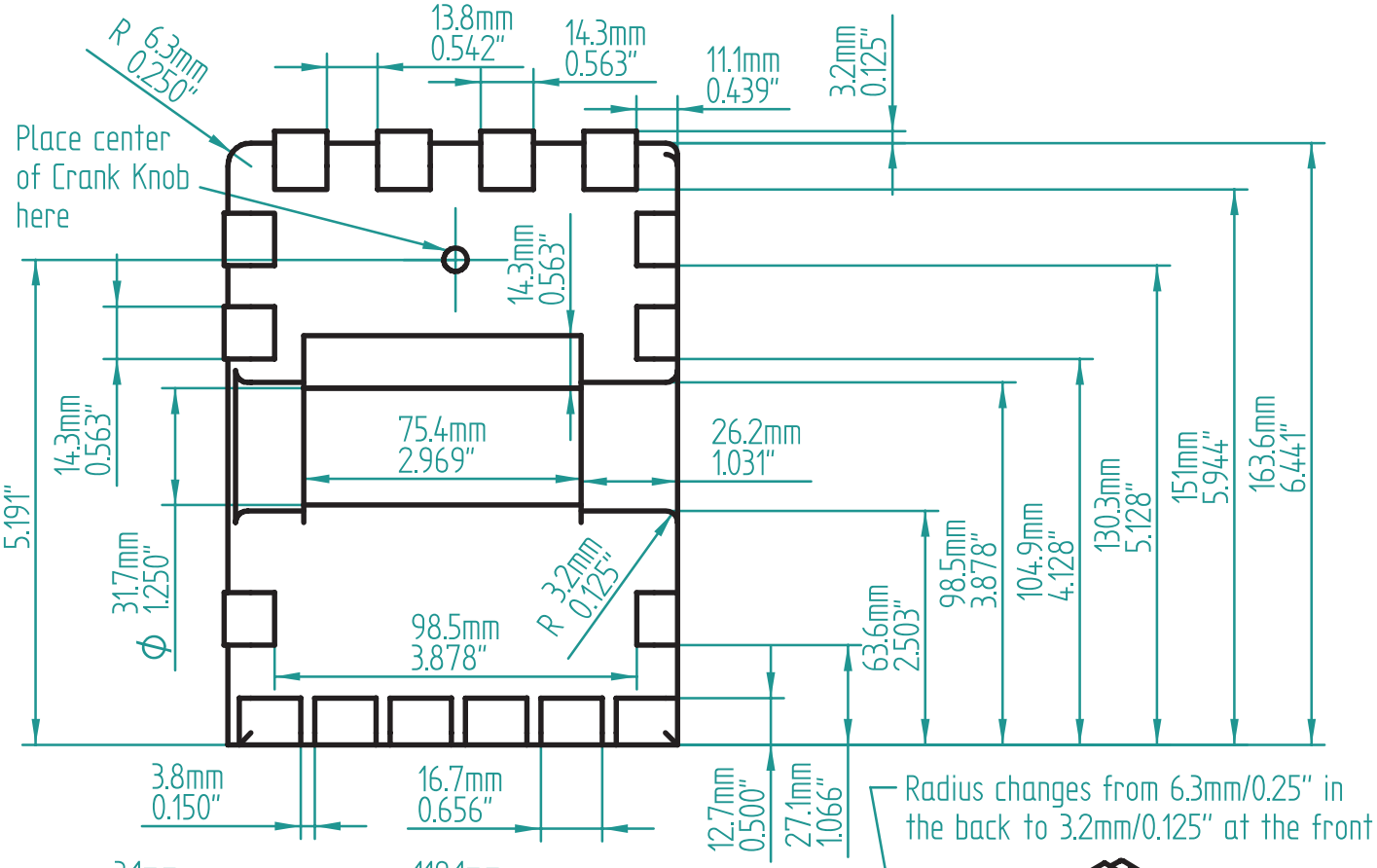

Radius changes from 6.3mm/0.25" in the back to 3.2mm/0.125" at the front

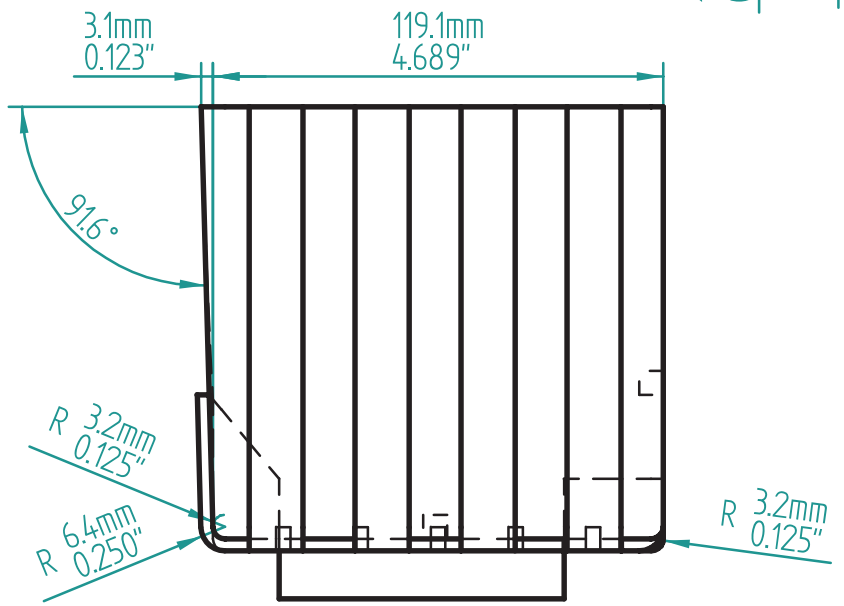

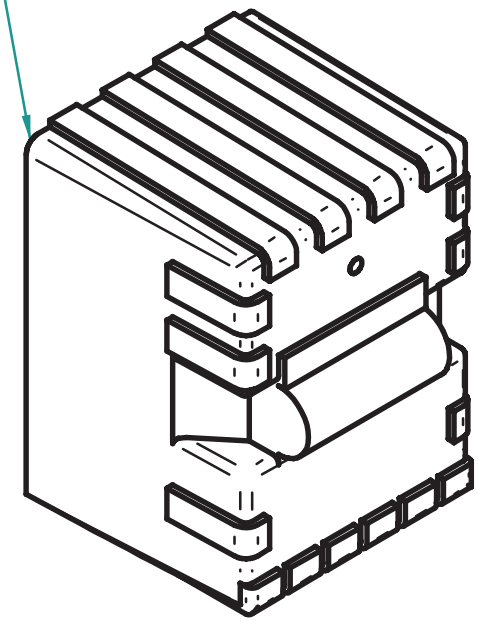

Note:
All corners at the front of the Box are rounded with a radius of 3.2mm/0.125"

Crank Generator & Gearbox
GB I Protonpack
Revison 0.97
Sheet 7