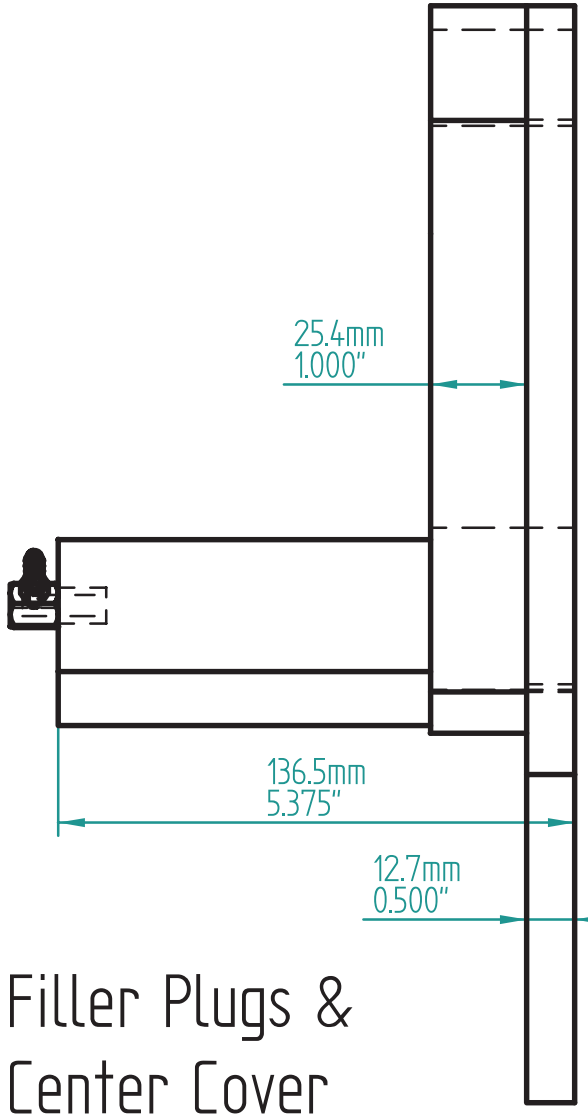

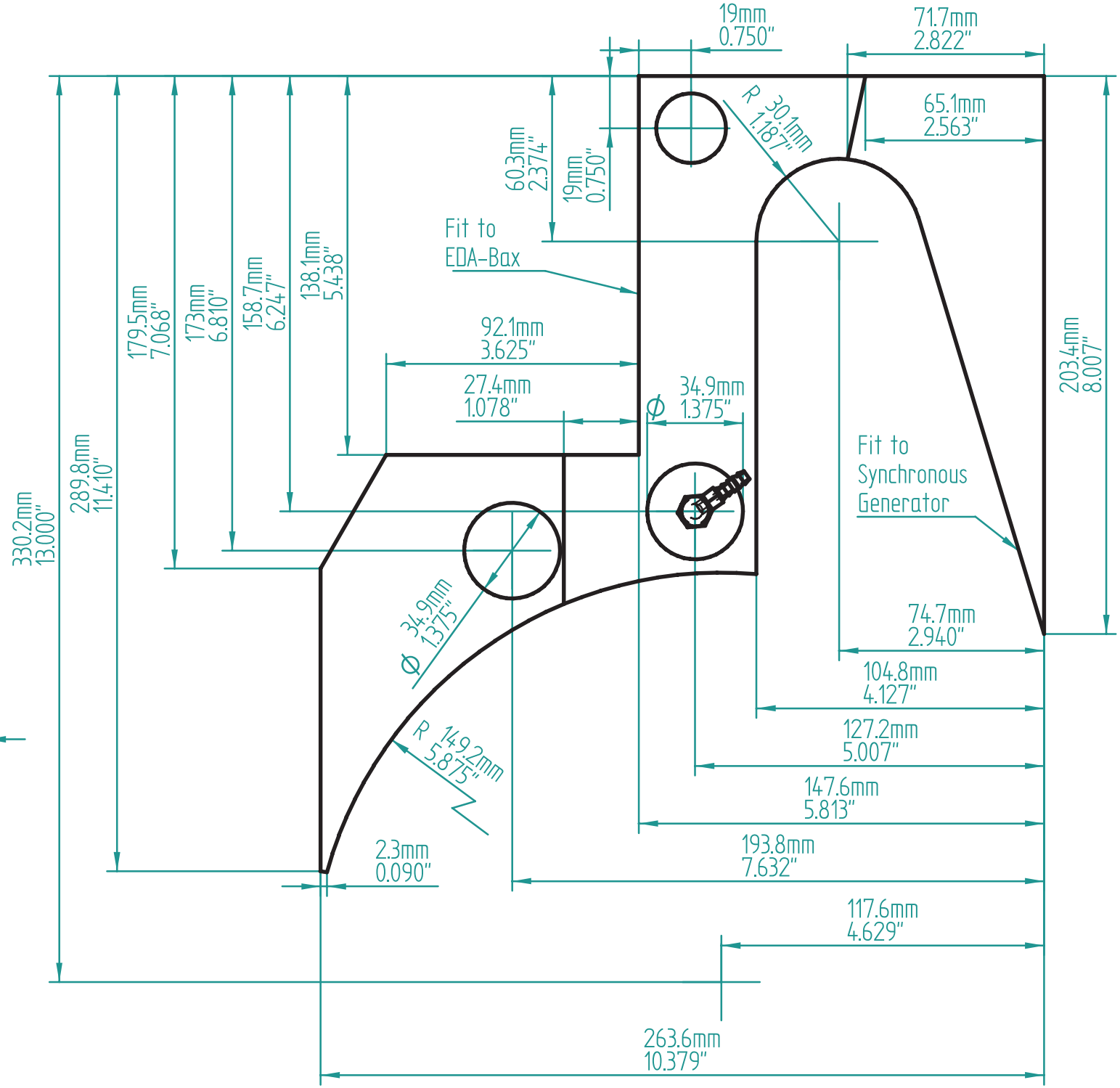

Filler Plugs & Center Cover GB I Protonpack

Revison 0.97

Sheet 10